# MAE162D:
# MECHANICAL PRODUCT DESIGN-I
## Lecture
## Trajectory Generation and Control

Instructor: **Professor Tsao**

Mechanical & Aerospace Engineering Department
University of California Los Angeles

Winter 2026

# Longitudinal and Lateral Driving Control

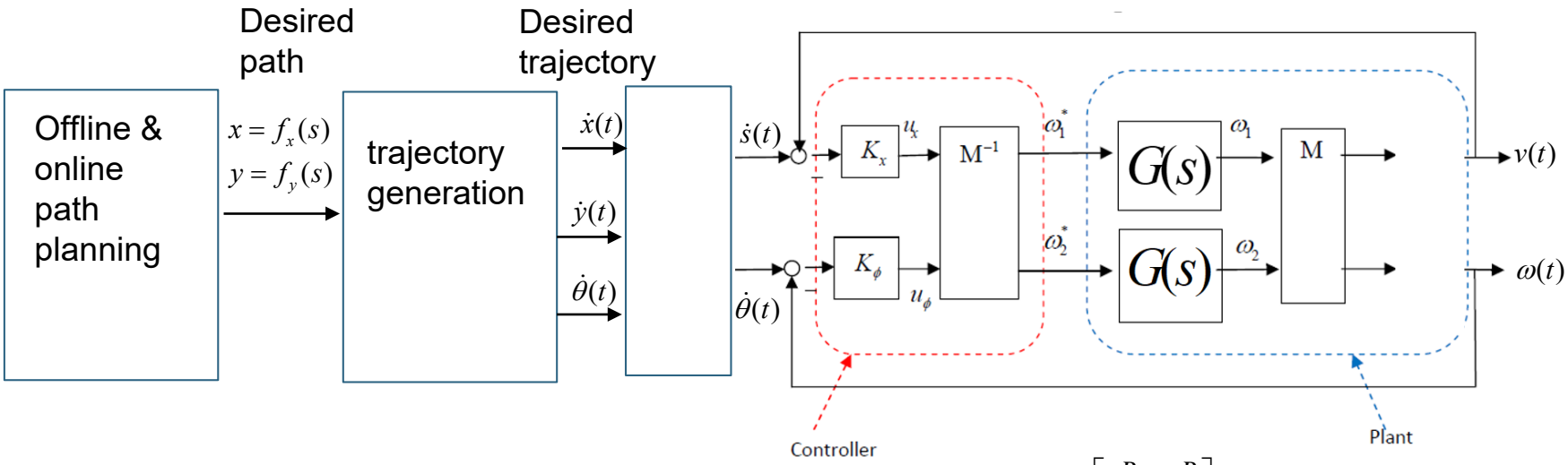


$$M = \begin{bmatrix} \frac{R}{2} & \frac{R}{2} \\ -\frac{R}{d} & \frac{R}{d} \end{bmatrix}$$

# Path

- Every point in a given path has the coordinate of the path length from the starting location and tangent line angle
- Path is discretized to compose segments of lines and arcs (radius of curvature), where each segment has the coordinate of the target location (end point of the segment): $(s_i, \theta_i), i = 1, 2, ...., N$
- Given the coordinates of the current and previous segment, the radius of curvature of the segment :

$$s_i = s_{i-1} + R_i(\theta_i - \theta_{i-1})$$

$$\rightarrow R_i = \frac{s_i - s_{i-1}}{\theta_i - \theta_{i-1}}$$

$$\theta_i - \theta_{i-1} = 0 \rightarrow R_i = \infty, i.e. \text{ straight line}$$

$$s_i - s_{i-1} = 0 \rightarrow R_i = 0, i.e. \text{ sharp turn with zero turning radius}$$

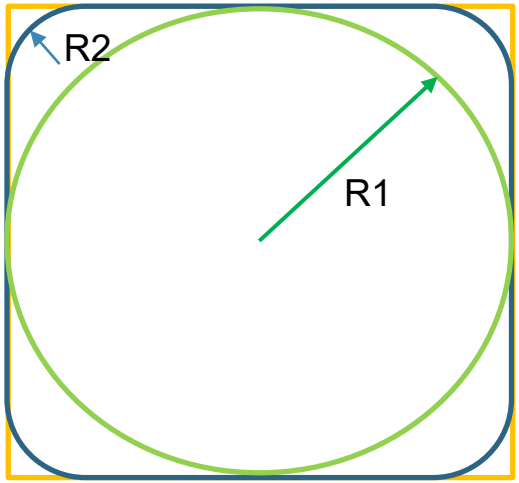

# Trajectory

- A trajectory includes path and time, think of the cycle time to traverse a path.
- A trajectory is discretized as the path segments plus the time schedule to reach the target locations, or each segment's time duration (move time): $(L_i, \theta_i, \Delta T_i), i = 1, 2, ...., N$

- Given the coordinates of the current and previous segment, and the move time the longitudinal speed along the path and lateral angular speed of the path turning can be determined:

$$\dot{s}_i \approx \frac{L_i - L_{i-1}}{\Delta T_i}, \quad \dot{\theta}_i \approx \frac{\theta_i - \theta_{i-1}}{\Delta T_i}$$

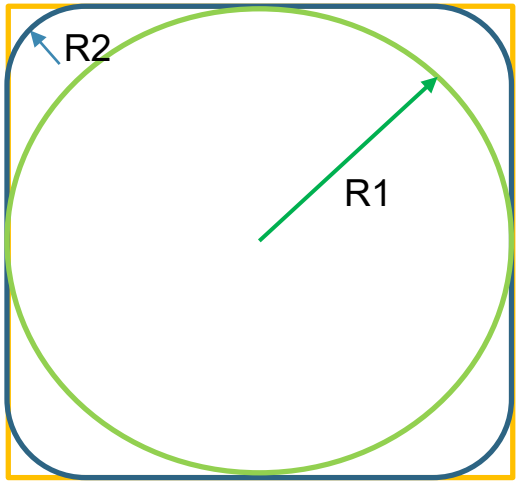

# Trajectory Control

- Reference command: current target location, i.e. path length and angular speed of the current segment $(L_i, \theta_i, \Delta T_i), i = 1, 2, ...., N$

- Feedback measurement: current location, i.e. path length and angular speed $(L(t), \theta(t))$

- Proportional Feedback Control:

$$\dot{s}_{ref}(t) = K_{sp} \cdot (L_i - L(t)), \quad \dot{\theta}_{i,ref} = K_{\theta p} \cdot (\theta_i - \theta(t))$$

- Servo Control: Motor PI control to follow the reference speed commands.

# Simulink Simulation:  Without Motor Control Loop

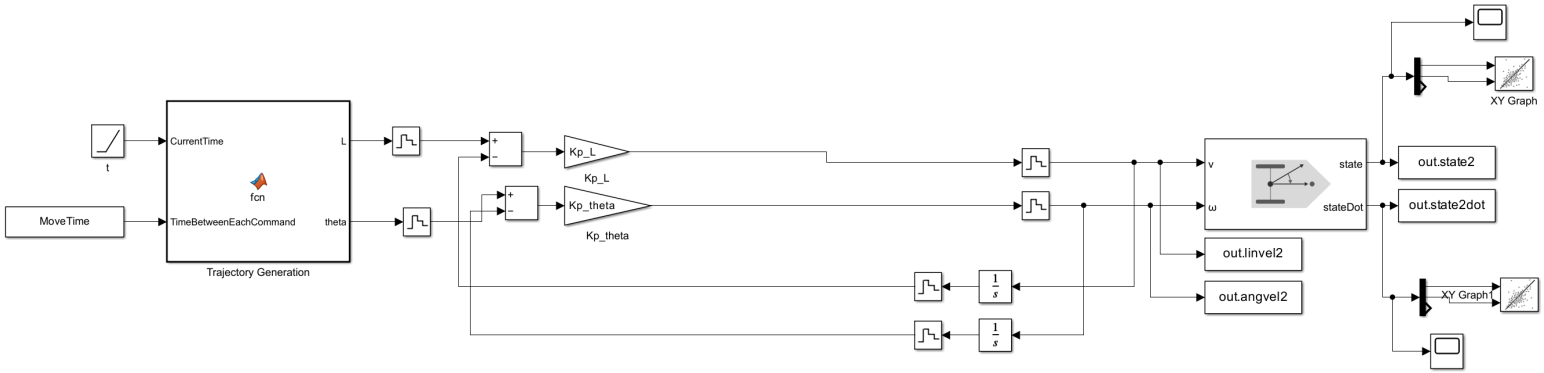
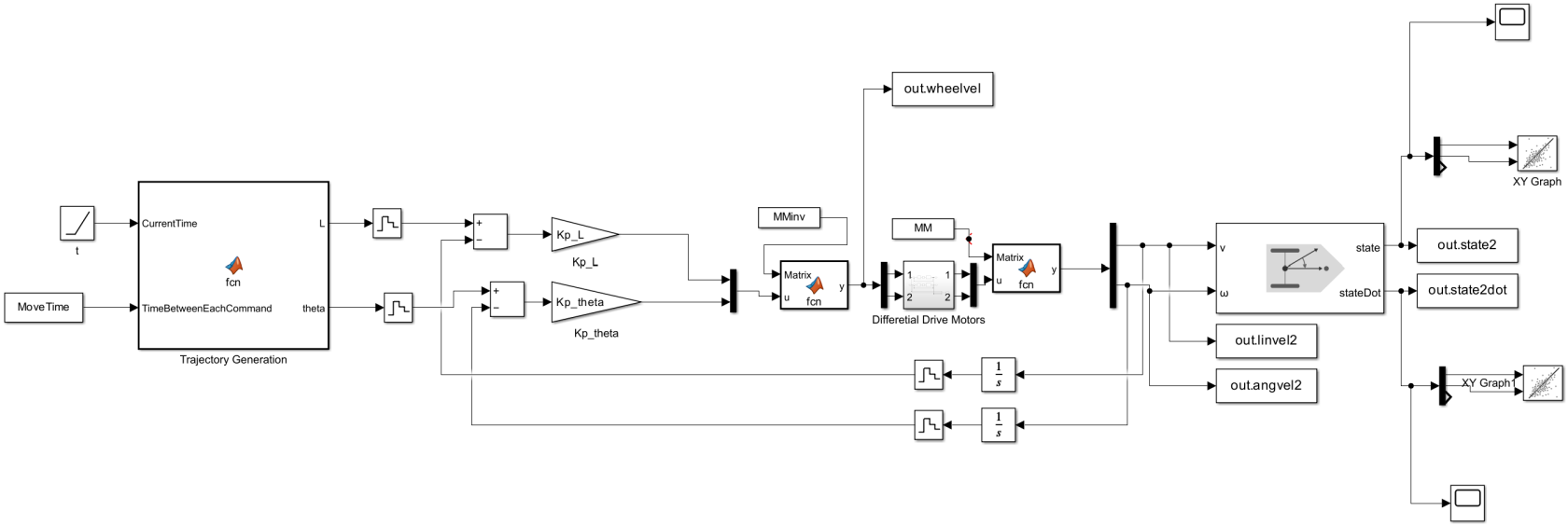
# Simulink Simulation:  With Motor Control Loop